Proportional Booster Valve

Pipe Thread Mount Dimensions

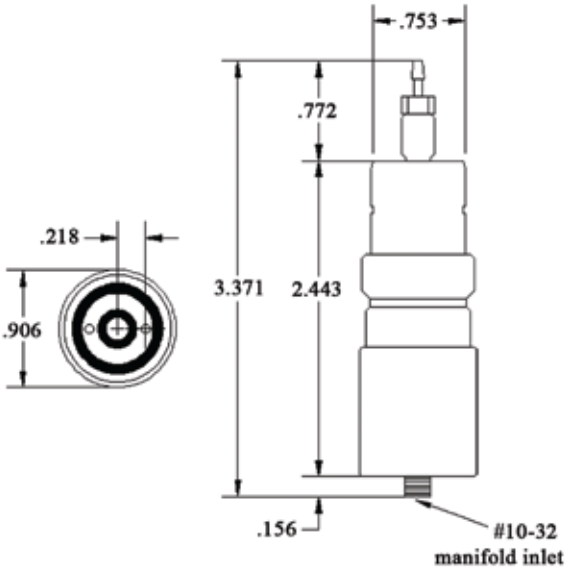

Kelly Pneumatics, Inc. offers a Proportional Booster Valve with high flow capabilities. This valve performs at exceptionally high flow parameters with respect to it's compact size, especially when compared to other valves of similar dimensions. The Proportional Booster Valve requires a small gas consumption to atmosphere of less than .04 CFM maximum.

Valve Type:	2-way proportional with booster
Electrical Connection:	Wire leads or Terminal Spades
Working Pressure:	50 or 100 PSIG
Flow Range:	172 SLPM / 6.1 SCFM @ 100 PSIG
Temperature Range:	32º - 120ºF (0º - 50ºC)
Voltage Range:	0-5, 0-10, or 0-20 VDC @ 2.3 watts max
Response Time:	100 MS @ 100 PSIG
Mounting:	Manifold mount
Seal Material:	Buna-N, Viton, or EPDM
Maximum Hysteresis:	15% of full current
Gas Consumption:	.04 CFM maximum

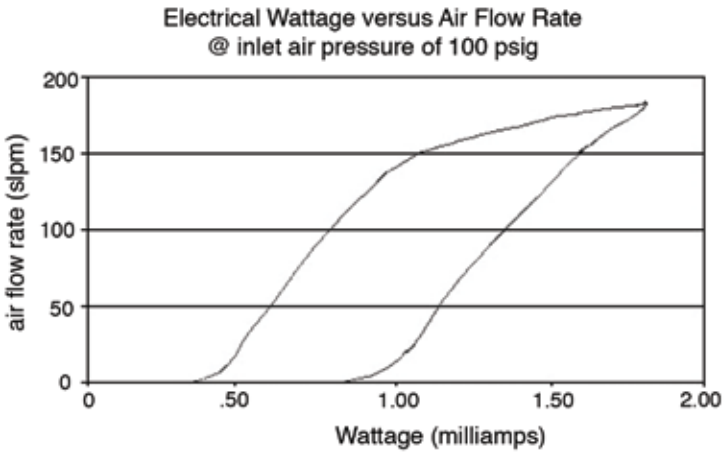

Part Numbering System

KPIB – ☐ PM – ☐ – 25 – ☐ – ☐

Electrical Connection:
T - Terminal Spades
V - Wire Leads

Voltage:
05 - 0 to 5 vdc
10 - 0 to 10 vdc
20 - 0 to 20 vdc

Maximum Pressure:
50 - 50 PSIG
A0 - 100 PSIG

Seal Type:
Blank - Buna N
E - EPMD
V - Viton